PRE-BUILT CROSSOVER KIT

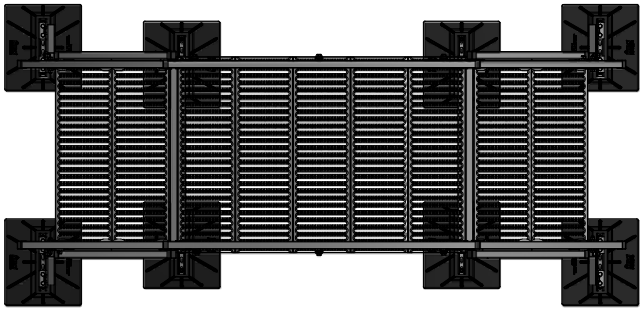

TOP VIEW

ISOMETRIC VIEW

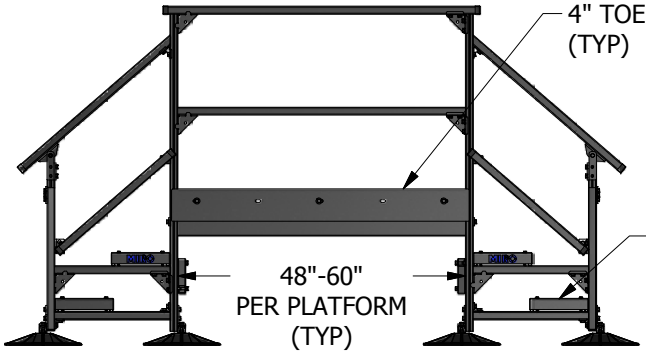

SIDE VIEW

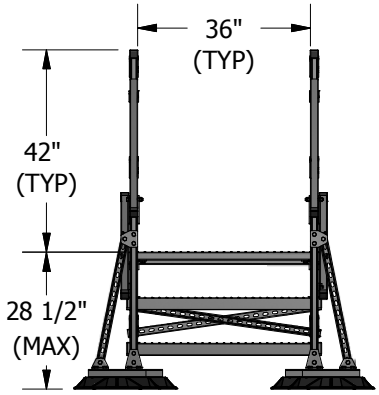

FRONT VIEW

ACCESSORIES

- MIRO Support pad
- Eternabond® 2-sided tape

PRODUCT DESCRIPTION

The MIRO 2-CO-60 Pre-Built Crossover Kit is designed with a 28-1/2" deck height, 19" minimum (13-1/4" to 22-3/4" clearance height), with spans from 48" to 60" per platform. The crossover is constructed of 1-5/8" 12 ga. strut framing and 12" non-slip planking. 16"x18" polycarbonate bases ensure proper load distribution to your roof deck.

All crossover structures are designed to meet loading criteria for maintenance access per requirements found in the Adopted Local Building Code, IBC, ASCE 7 and OSHA 1910 Subpart D.

INSTALLATION PROCEDURES

1. Typical MIRO crossover, walkway, service platform and ramp systems are shipped partially assembled. (Field assembly is required)
2. Use provided hardware and included drawings to build a suitable support.
3. Clear all loose gravel and aggregate away from base locations.
4. Place MIRO base on a MIRO Support Pad or other sacrificial pad for additional protection.
5. Make sure each base is firmly resting on the roof surface, making any necessary adjustments so that even-loading is distributed to the roof.

CUSTOM SIZES AND LAYOUTS CAN BE DESIGNED TO MEET YOUR PROJECT REQUIREMENTS.

PRE-BUILT CROSSOVER KIT

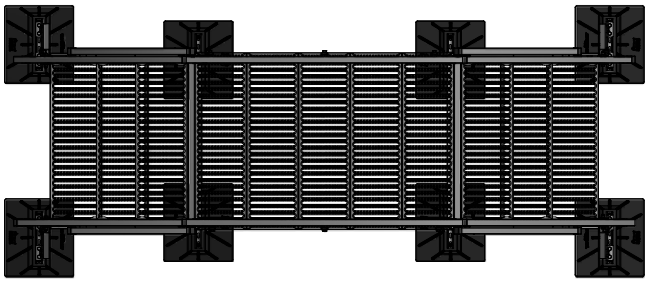

TOP VIEW

ISOMETRIC VIEW

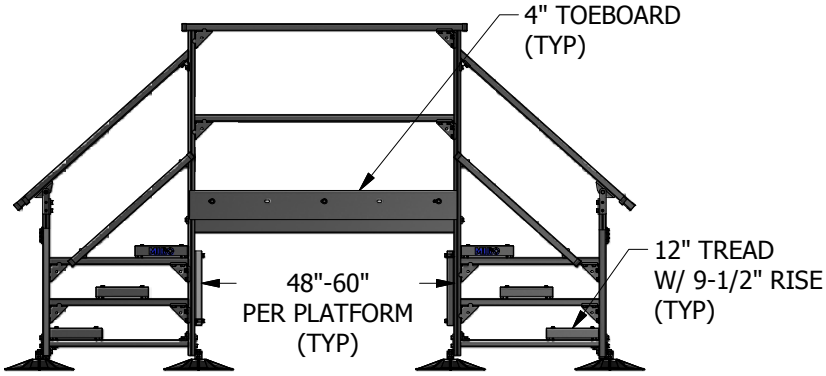

SIDE VIEW

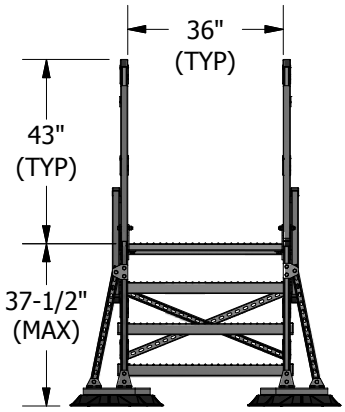

FRONT VIEW

ACCESSORIES

- MIRO Support pad
- Eternabond® 2-sided tape

PRODUCT DESCRIPTION

The MIRO 3-CO-60 Pre-Built Crossover Kit is designed with a 38" deck height, 28-1/2" minumum (22-3/4" to 32-1/4" clear height), with spans from 48" to 60" per platform. The crossover is constructed of 1-5/8" 12 ga. strut framing and 12" non-slip planking. 16"x18" polycarbonate bases ensure proper load distribution to your roof deck.

All crossover structures are designed to meet loading criteria for maintenance access per requirements found in the Adopted Local Building Code, IBC, ASCE 7 and OSHA 1910 Subpart D.

INSTALLATION PROCEDURES

1. Typical MIRO crossover, walkway, service platform and ramp systems are shipped partially assembled. (Field assembly is required)
2. Use provided hardware and included drawings to build a suitable support.
3. Clear all loose gravel and aggregate away from base locations.
4. Place MIRO base on a MIRO Support Pad or other sacrificial pad for additional protection.
5. Make sure each base is firmly resting on the roof surface, making any necessary adjustments so that even-loading is distributed to the roof.

CUSTOM SIZES AND LAYOUTS CAN BE DESIGNED TO MEET YOUR PROJECT REQUIREMENTS.

PRE-BUILT CROSSOVER KIT

ISOMETRIC VIEW

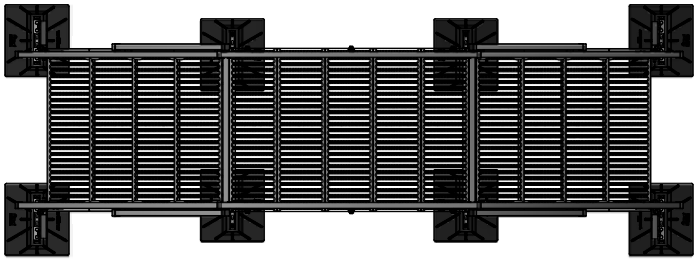

TOP VIEW

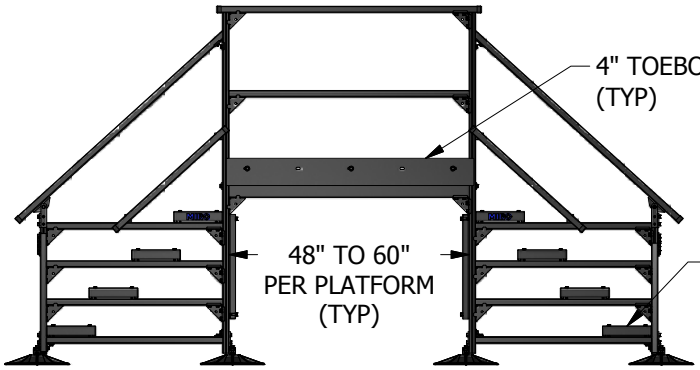

SIDE VIEW

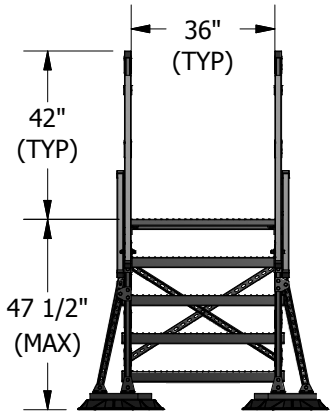

END VIEW

ACCESSORIES

- MIRO Support pad
- Eternabond® 2-sided tape

PRODUCT DESCRIPTION

The MIRO 4-CO-60 Pre-Built Crossover Kit is designed with a 47-1/2" deck height, 38" minimum (32-1/4" to 41-3/4" clear height), with spans from 48" to 60" per platform. The crossover is constructed of 1-5/8" 12 ga. strut framing and 12" non-slip planking. 16"x18" polycarbonate bases ensure proper load distribution to your roof deck.

All crossover structures are designed to meet loading criteria for maintenance access per requirements found in the Adopted Local Building Code, IBC, ASCE 7 and OSHA 1910 Subpart D.

INSTALLATION PROCEDURES

1. Typical MIRO crossover, walkway, service platform and ramp systems are shipped partially assembled. (Field assembly is required)
2. Use provided hardware and included drawings to build a suitable support.
3. Clear all loose gravel and aggregate away from base locations.
4. Place MIRO base on a MIRO Support Pad or other sacrificial pad for additional protection.
5. Make sure each base is firmly resting on the roof surface, making any necessary adjustments so that even-loading is distributed to the roof.

CUSTOM SIZES AND LAYOUTS CAN BE DESIGNED TO MEET YOUR PROJECT REQUIREMENTS.

PRE-BUILT CROSSOVER KIT

ISOMETRIC VIEW

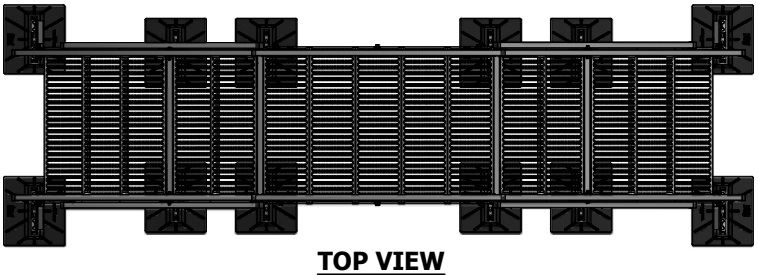

TOP VIEW

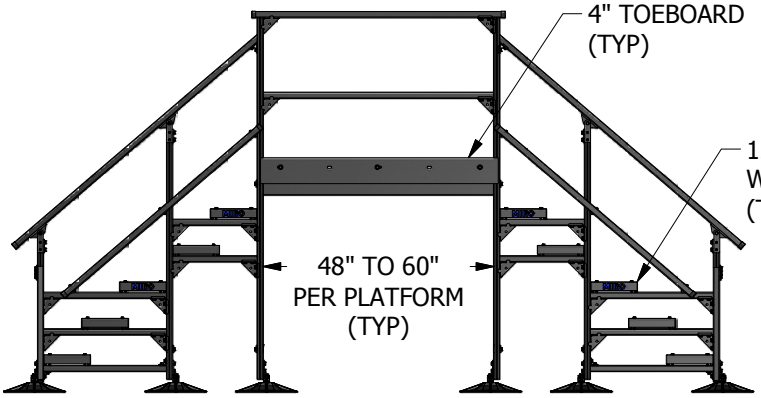

SIDE VIEW

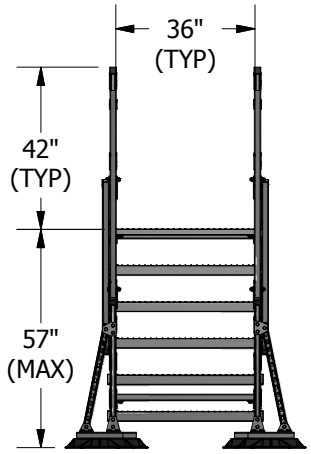

END VIEW

ACCESSORIES

- MIRO Support pad
- Eternabond® 2-sided tape

PRODUCT DESCRIPTION

The MIRO 5-CO-60 Pre-Built Crossover Kit is designed with a 57" deck height, 47-1/2" minimum (41-3/4" to 51-1/4" clear height), with spans from 48" to 60" per platform. The crossover is constructed of 1-5/8" 12 ga. strut framing and 12" non-slip planking. 16"x18" polycarbonate bases ensure proper load distribution to your roof deck.

All crossover structures are designed to meet loading criteria for maintenance access per requirements found in the Adopted Local Building Code, IBC, ASCE 7 and OSHA 1910 Subpart D.

INSTALLATION PROCEDURES

1. Typical MIRO crossover, walkway, service platform and ramp systems are shipped partially assembled. (Field assembly is required)
2. Use provided hardware and included drawings to build a suitable support.
3. Clear all loose gravel and aggregate away from base locations.
4. Place MIRO base on a MIRO Support Pad or other sacrificial pad for additional protection.
5. Make sure each base is firmly resting on the roof surface, making any necessary adjustments so that even-loading is distributed to the roof.

CUSTOM SIZES AND LAYOUTS CAN BE DESIGNED TO MEET YOUR PROJECT REQUIREMENTS.